DATALOGIC
AUTOMATIC DATA CAPTURE

GRYPHON™ I GFS4100

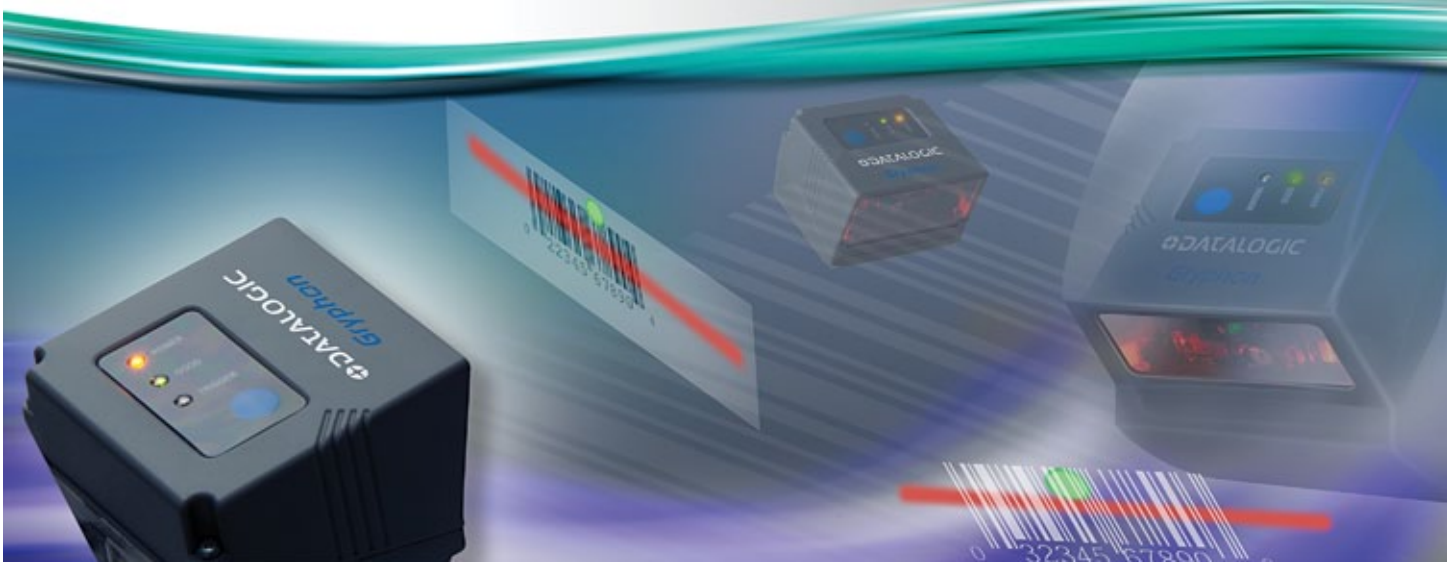

FIXED MOUNT LINEAR IMAGER BAR CODE READER

Using advanced imaging technology, the Gryphon™ I GFS4100 fixed mount bar code reader provides a complete self-contained solution for OEM use into self-service kiosks, price verifiers, ticket readers, document handling, and medical laboratory applications, as well as vending machines and other automated equipment.

Designed for easy integration, the Gryphon I GFS4100 reader provides a simple 'plug-and-play' solution for system designers. Constructed using high-impact resin to withstand repeated cleanings with solvents and disinfectant solutions, the sealed enclosure meets industrial standards against water and particulates to provide dependable and reliable scanning performance.

The Gryphon I GFS4100 OEM module shares the same excellent reading characteristics found in the premium line of Gryphon™ 4100 series of handheld devices. Featuring outstanding near-field reading, a wide angle field-of-view, improved motion tolerance and snappy reading, it also offers integrators excellent performance on decoding poor or damaged codes. As with all Gryphon readers, the GFS4100 reader offers users additional good-read visual confirmation with Datalogic's patented 'Green Spot' technology.

The Gryphon I GFS4100 reader supports several modes that can be used as a trigger. The module has the ability to automatically sense objects and trigger itself. A continuous scan mode transmits data whenever a bar code passes into its field of view. The reader can be triggered remotely using input from programmable logic controller (PLC) or sensor.

Available in two models, the GFS4150-9 model supports an RS-232 serial interface, or the GFS4170 features a USB interface. The USB version supports both USB-HID for easy integration and keyboard emulation, or USB COM for virtual serial communications.

FEATURES

- High-speed imaging for fast moving codes
- Read rate: 320 reads/second
- Excellent near-field reading at the scan window
- Supports all common linear (1D) bar codes including GS1 DataBar™
- Reads high resolution bar codes up to 3 mils
- Datalogic's patented Green Spot for good-read feedback
- Integrated good-read beeper
- Automatic sensing or manual trigger options available
- Integrated interface cable
- High-impact resin creates a solvent-tolerant enclosure
- Water and Particulate Sealing Rating: IP54

GREEN SPOT
DATALOGIC aladdin
GS1

www.adc.datalogic.com

DECODING CAPABILITY

1D / LINEAR CODES	Autodiscriminates all standard 1D codes including GS1 DataBar™ linear codes.

ELECTRICAL

CURRENT	Operating (Typical): 390 mA Standby/Idle (Typical): GFS4170: < 2.5 mA
INPUT VOLTAGE	5 VDC +/- 5%

ENVIRONMENTAL

AMBIENT LIGHT	0 - 100,000 lux
DROP RESISTANCE	Withstands repeated drops from 0.76 m / 2.50 ft onto a concrete surface
ESD PROTECTION (AIR DISCHARGE)	16 kV
HUMIDITY (NON-CONDENSING)	95%
PARTICULATE AND WATER SEALING	IP54
TEMPERATURE	Operating: 0 to 50 °C / 32 to 122 °F Storage/Transport: -25 to 50 °C / -13 to 122 °F

INTERFACES

INTERFACES	RS-232; USB

PHYSICAL CHARACTERISTICS

COLORS AVAILABLE	Grey; Other colors and custom logo options are available for minimum quantity purchase.
DIMENSIONS	3.9 x 5.7 x 5.8 cm / 1.5 x 2.2 x 2.3 in
WEIGHT	170.0 g / 6.0 oz (including a 2.0 m / 6.6 ft RS-232 cable)

READING PERFORMANCE

IMAGER SENSOR	CCD Solid State
LIGHT SOURCE	Illumination: Dual LED Array 630 - 670 nm
PRINT CONTRAST RATIO (MINIMUM)	15%
READ RATE (MAXIMUM)	320 reads/sec.
READING ANGLE	Pitch: +/- 65°; Roll (Tilt): +/- 35°; Skew (Yaw): +/- 65°
READING INDICATORS	Beeper; Datalogic 'Green Spot' Good Read Feedback; Good Read LED
RESOLUTION (MAXIMUM)	0.076 mm / 3 mils

READING RANGES

TYPICAL DEPTH OF FIELD	Minimum distance determined by symbol length and scan angle. Printing resolution, contrast, and ambient light dependent. 5 mils: 5.0 to 16.0 cm / 2.0 to 6.3 in 8 mils: 3.0 to 27.0 cm / 1.2 to 10.6 in 10 mils: 1.5 to 30.0 cm / 0.6 to 11.8 in 13 mils: 3.0 to 40.0 cm / 1.2 to 15.7 in 20 mils: up to 60.0 cm / up to 23.6 in

SAFETY & REGULATORY

AGENCY APPROVALS	The product meets necessary safety and regulatory approvals for its intended use. The Quick Reference Guide for this product can be referred to for a complete list of certifications.
ENVIRONMENTAL COMPLIANCE	Complies to China RoHS; Complies to EU RoHS
LED CLASSIFICATION	IEC 60825-1 Class 1 LED Product

UTILITIES

DATALOGIC ALADDIN™	Datalogic Aladdin configuration program is available for download at no charge.
OPOS / JAVAPOS	JavaPOS Utilities are available for download at no charge. OPOS Utilities are available for download at no charge.
REMOTE HOST DOWNLOAD	Lowers service costs and improves operations.

WARRANTY

WARRANTY	3-Year Factory Warranty

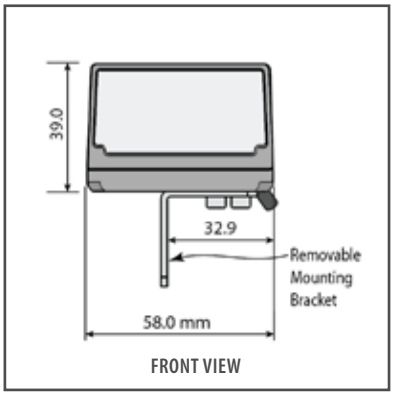

FRONT VIEW

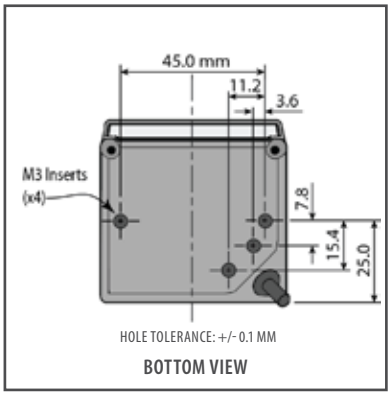

BOTTOM VIEW

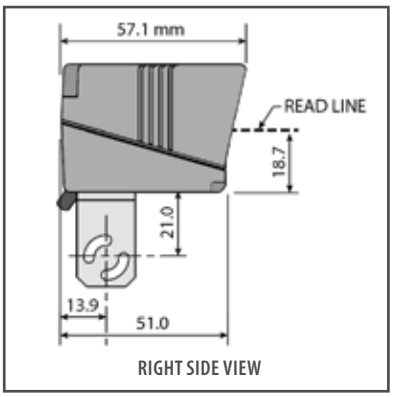

RIGHT SIDE VIEW

© 2011 - 2012 Datalogic ADC, Inc. • All rights reserved. • Protected to the fullest extent under U.S. and international laws. • Copying, or altering of this document is prohibited without express written consent from Datalogic ADC, Inc. • Datalogic and the Datalogic logo are registered trademarks of Datalogic S.p.A. in many countries, including the U.S. and the E.U. and the Datalogic Automatic Data Capture logo is a trademark of Datalogic S.p.A. • Datalogic Aladdin is a trademark of Datalogic ADC Group S.r.l. • Gryphon is a trademark of Datalogic ADC, Inc. • All other brand and product names are trademarks of their respective owners. • DS-GRYPHONIGFS4100-ENA4 20120716